DC/DC ZDF600-28S28C

Input 16V-40V Output 28V/21.5A Standard Full Brick

Features



- *Full Brick (116.8mm × 61.0mm × 12.7mm)*
- *Input Under Voltage Protection (13 to 16Vdc Turn off)*
- *Positive Logic Control (3.5V to 15V or floating Turn on)*
- *Output Over Voltage Protection (32.2 ~ 37.2Vdc)*
- *Output Voltage Trim Range: ±10% of Vo*
- *Output Over Current Protection*
- *Output Short-Circuit Protection, Auto Restart*
- *5% Output Current Sharing*
- *Efficiency up to 92% (Input 28V, Full load)*
- *I/O Isolation 1500 VDC*
- *Operating Baseplate Temperature : -40 ℃ to +105 ℃*
- *Applications: Telecommunication applications,Electronic data processing, Distributed power architecture, Industrial systems etc.*

Outline Diagram

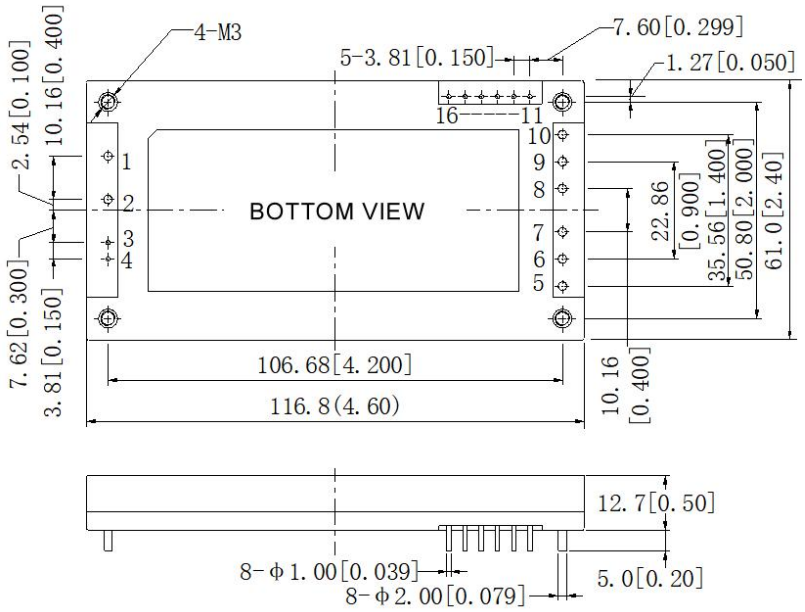

Pin	Symbol	Function
1	-Vin	Negative Input
2	+Vin	Positive Input
3	SG	Remote Control Gnd
4	CNT	Remote Control Terminal
5、6、7	+Vo	Positive Output
8、9、10	-Vo	Negative Output
11	-S	Negative Remote Sense
12	+S	Positive Remote Sense
13	Trim	Output Voltage Adjust
14	PC	Parallel Operation
15	IOG	Inverter Operation Monitor
16	AUX	Auxiliary Power Supply

Case material: Aluminum thermal substrate, black flame-retardant plastic.

The heat sink can be connected to protective earth via M3 screws.

Pin: Copper with golden plating.

Unit: mm (inches)

Tolerances: X.X±0.5mm (X.XX±0.02)

X.XX±0.25mm (X.XXX±0.010)

Part Number Structure

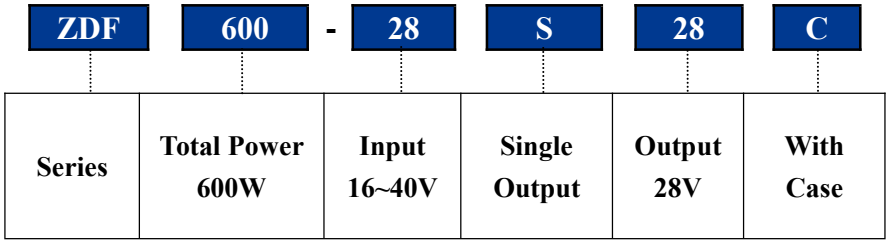

Specification

All values are given at 25℃, one standard atmosphere pressure, pure resistive load and basic connection unless otherwise noted.

Input		Symbol	Min	Typ	Max	Unit	Conditions
Input Voltage		V_{in}	16	28	40	V	—
		V_{in}	18	28	40	V	Recommended input voltage
Maximum Input Voltage		—	–	–	50	V	100ms max
Input Capacitor (External)		C_{in}	–	220	–	μF	Ceramic and electrolytic capacitor, close to the input pin
No-Load Input Current		$I_{in\ nl}$	–	–	800	mA	V_{in}=16V, I_O=0A
Input Current		I_{in}	–	–	45	A	V_{in}=16V, I_O=21.5A
Positive Logic Remote Control	ON	—	3.5	–	15	V	Refer to –V_{in} Also turn on when CNT floating.
	Input Current	—	–	–	1.0	mA	CNT input current when Active-High
	OFF	—	0	–	1.0	V	Refer to –V_{in}
	Output Current	—	–	–	1.0	mA	CNT output current when Active-Low shutdown
Under Voltage Threshold		V_{UVLO}	13	–	16	V	50% load test
Under Voltage Protection Hysteresis		$\triangle V_{UVLO}$	1	1.5	2	V	—

Output	Symbol	Min	Typ	Max	Unit	Conditions
Output Voltage Set Point	V_O	27.72	28.00	28.28	V	V_{in}=28V, 100% load test
Output Current	Ionom	–	21.5	–	A	—
Output Voltage Adjust Range	V_{trim}	25.2	–	30.8	V	Adjust up : Po≤600W Adjust down : Io≤21.5A
Line Regulation	S_V	–	±0.2	–	% V_O	Recommended Input: 16V ~ 40V, Io=21.5A
Load Regulation	S_I	–	±0.5	–	% V_O	V_{in}=28V, I_O: 0 ~ 21.5A
Output Over Voltage Protection Set Point	$V_{ov,set}$	32.2	–	37.2	V	Hiccup mode
Output Over Current Protection Range	$I_{O,lim}$	23.6	–	32.2	A	Hiccup mode
Output Short-circuit Protection	Hiccup mode, Auto-recovery					—

Continue

Output		Symbol	Min	Typ	Max	Unit	Conditions
Ripple & Noise		$\triangle V_{pp}$	–	–	280	mV	V_{in}=28Vdc, Ionom , 20MHz bandwidth, parallel line tooling test, a 1μF and a 10μF ceramic capacitor applied at output
Output Overshoot		V_{TO}	0	–	1.4	V	Vin=28V, Ionom, pure resistive load
Capacitive Load		C_O	0	–	2000	μF	pure resistive load
Output Dynamic Response	Recovery Time	t_{tr}	–	300	600	μs	25% ~ 50% ~ 25% Ionom or 50% ~ 75% ~ 50% Ionom; 0.1A /μs
	Voltage Deviation	$\triangle V_{tr}$	–	±1400	±2100	mV	
Current Sharing Accuracy		—	–	–	5	%Io	Up to four modules in parallel for current sharing，Io=5A～21.5A
Auxiliary power supply	Vaux	—	11	–	14	V	—
	Iaux	—	0	–	20	mA	—

General	Symbol	Min	Typ	Max	Unit	Conditions
Efficiency	η	90	92	–	%	V_{in}=28V, Ionom
Isolation Resistance	R_{iso}	50	–	–	MΩ	500Vdc,90%RH
Isolation Voltage	V_{iso}	1500	–	–	V_{dc}	Input to Output Leak Current: 1mA
		1050	–	–	V_{dc}	Input to Case Leak Current: 1mA
		500	–	–	V_{dc}	Output to Case Leak Current: 1mA
MTBF	—	–	2×10^6	–	h	Bellcore TR332, 25℃
Baseplate Temperature	—	-40	–	+105	℃	—
Storage Temperature	—	-55	–	+125	℃	—
Temperature Coefficient	S_T	–	–	±0.02	%/℃	—
Relative Humidity	—	10	–	90	%	No condensing, 40℃±2℃
Over Temperature Protection Point	T_{ref}	106	110	120	℃	Maximum case surface temperature
Over Temperature Protection Hysteresis	$\triangle T_{ref}$	–	5	–	℃	
Hand Soldering	Maximum soldering Temperature < 425℃, and duration < 5s					
Wave Soldering	Maximum soldering Temperature < 255℃, and duration < 10s					

Operating Information

Basic Connection Diagram

The power module can operate normally without external component.For power systems with higher performance requirements, an external filter network may be added to the input circuit. The typical application is shown in Figure 1. Recommended values of external components are listed in Table 1.

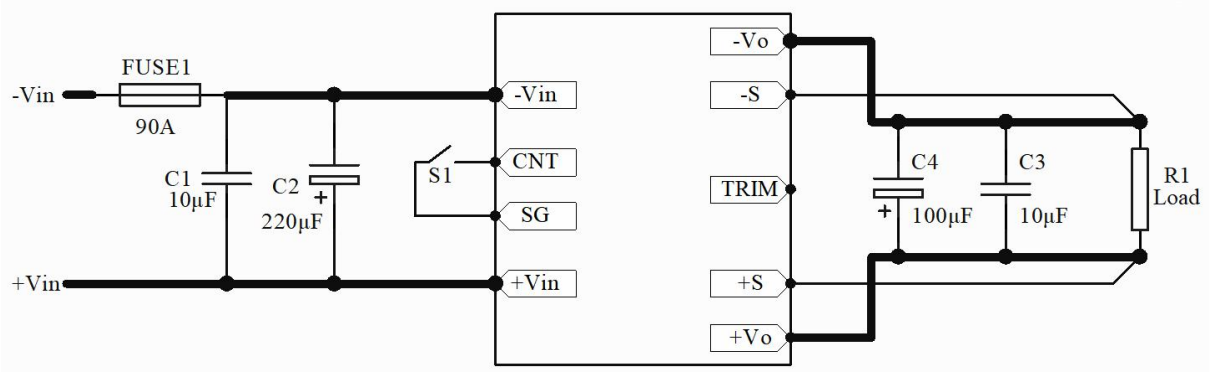

Figure 1 :Typical Application Circuit

Table 1 :Recommended Values of External Components

C2	High-frequency low-ESR electrolytic capacitor, 220μF/63V. This capacitor effectively reduces the input ripple,
C4	Solid capacitor or polymer capacitor, 100μF/50V. This capacitor effectively reduces the output ripple.
C1、C3	10μF/50V ceramic capacitor
FUSE1	Slow-blow fuse, 90A

Remote Sense

The remote sense can be used to compensate for the voltage drop between the output pins of the converter and the load input pins by +S / -S pins. The +S and –S pins should be connected to the input pins of the load respectively. The remote sense circuit will compensate for up to 0.5V voltage drop between the sense voltage and the voltage at the output pins. If the remote sense is not needed, the –S should be connected to -Vo and +S should be connected to +Vo.

The anti-interference design should be considered when the +S / -S pins are connected to the pins to be compensated. The +S and -S traces should be located close to a ground trace or ground plane, and the area they surrounded should be minimized (just for electrical isolation); If cable connection presents, twisted pair wires should be used, EMI core are equipped with the twisted pair wires to reduce common mode noise when necessary, the sense leads should not be longer than 200mm,or the system characteristics may not be assured.

The sense leads only can carry very little current, and are not used for converter power output. Care should be taken in operation to avoid damaging the converter.

Remote Control

Remote control can be offered by setting right control voltage level (or floating) to CNT pin. ZDF600-28S28C is provided with positive logic remote control.When the level is higher than 3.5V or be left floating, the converter will be turned on. When the level is less than 1.2V, the converter will be turned off. When low voltage level is applied, the output current of the CNT is less than 5mA.When high voltage level (3.5V ~ 15V) is applied, the input current of the CNT is less than 1mA.

ZDF600-28S28NC is provided with negative remote control. When the level is higher than 3.5V or be left floating, the converter will be turned off. When the level is less than 1.2V, the converter will be turned on .

Since the logic comparator is a semiconductor integrated circuit, it has low surge endurance. Care should

be taken to protect CNT from surges. A TVS diode should be used where necessary. When the pin is left floating, a voltage of 2.0 V to 6.0 V may appear on the pin.

Output Voltage Adjust

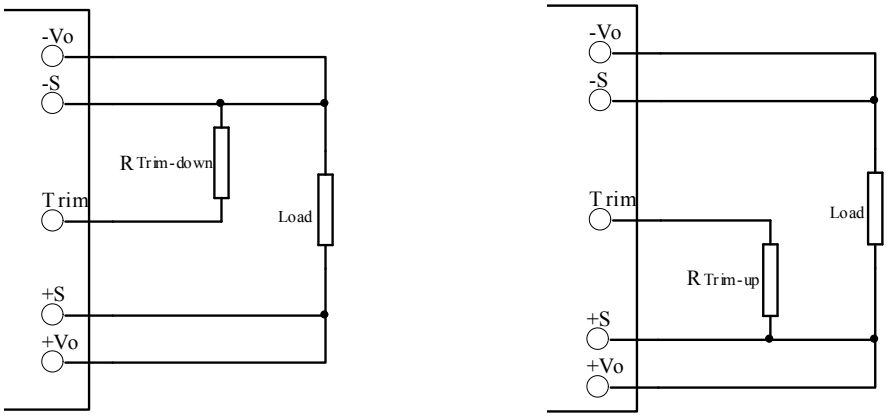

Connection for Trimming Down Connection of Trimming Up

Figure 2:Connection for Output Voltage Adjust

The converters have an Output Voltage adjust pin (Trim). This pin can be used to adjust the output voltage above or below Output voltage initial setting. When increasing the output voltage, the voltage at the output pins (including any remote sense offset) must be kept below the maximum output adjust range, or the characteristics will not be assured in compliant with the specification, even the over voltage protection may be triggered. Also note that at increased output voltages the maximum power rating of the converter 600W remains the same, and the output current capability will decrease correspondingly, at decrease output voltages the maximum current should not exceed 21.5A. When the trim pins are not used, they should be floated.

External circuit is connected as the figure shown, the resistance is calculated as the formula below, please note that the formula will be invalid when $R_{Trim-up}$、$R_{Trim-down}$ are used simultaneously, users adjust the value based on the resistance applied.

Resistance for trimming up: $R_{Trim-up} = \left(\frac{5.11 \times Vo(100(\%) + \Delta(\%))}{1.24 \times \Delta(\%)} - \frac{5.11 \times 100(\%)}{\Delta(\%)} - 10.22 \right) (k\Omega)$

Resistance for trimming down: $R_{Trim-down} = \left(\frac{5.11 \times 100(\%)}{\Delta(\%)} - 10.22 \right) (k\Omega)$

Vo : Rated output voltage 28V ;

$R_{Trim-up}$、$R_{Trim-down}$: Resistance for trimming up or down (unit kΩ) ;

$\Delta(\%)$: Change rate, divide output voltage by rated output voltage.

For example, trimmed down voltage to 26.6V, then $\Delta(\%)$ = [(28-26.6) / 28] x 100%=5% ;

$R_{Trim-down}$ = 5.11×100% / 5%-10.22=91.98(kΩ), it can be taken as 92KΩ.

Auxiliary Power Output (AUX)

The AUX pin provides an Auxiliary power supply of 11 V ~ 14 V with a maximum output current of 20 mA. The return ground for this auxiliary supply is the -S pin. Avoid shorting the AUX pin to any other pins during operation; otherwise, module damage may occur.

Application of Parallel Current Sharing

To improve the reliability and output power of the system power supply, multiple power supplies can be operated in parallel with current sharing. This module adopts the democratic master-slave current sharing scheme. Automatic current sharing is achieved by connecting the Share pin after paralleling. The module with larger output current acts as the master module.

the wiring shown in the figure 3 can be adopted for parallel current sharing application.U1 is an optocoupler used to control simultaneous startup of paralleled power supplies. Alternatively, the enable control terminal can be shorted to the negative input for control. The control lines shall be routed away from power noise sources as much as possible.

The current sharing accuracy is ±5%, the output voltage accuracy of each individual module shall be within ±1% when operating standalone, For voltage trimming applications, trim each module individually,and the output power of each paralleled module shall not exceed its rated power. The total rated power under parallel operation shall be less than 90% of the sum of the rated power of individual modules.

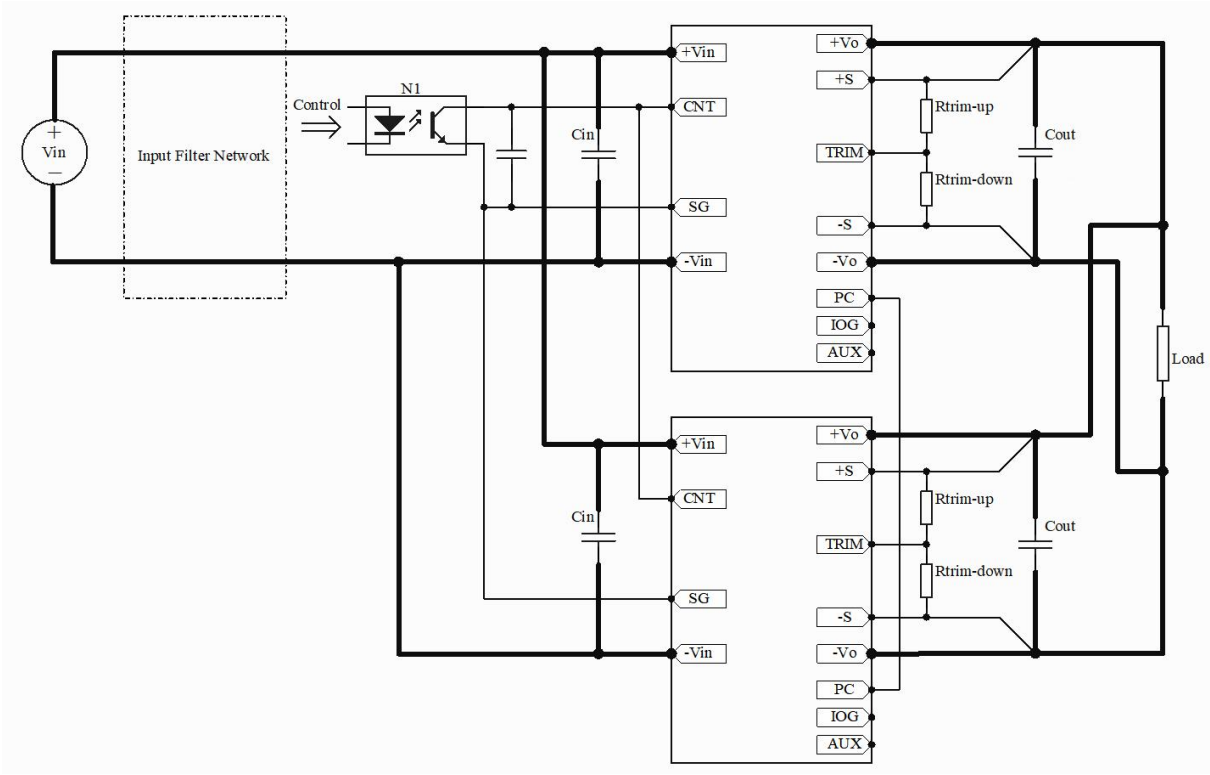

Figure 3 :Parallel Current Sharing Wiring Diagram

Cautions

1) The enclosure of ZDF600-28S28C is not fully sealed. Immersion or washing may allow liquid to penetrate the enclosure, thereby causing performance degradation or damage. It is therefore recommended to clean solder joints and exterior surfaces with alcohol only.
2) The product features a wide input range. When the supply-side input impedance is high, ensure that the supply voltage does not fall below 16Vdc. When the input inductance is high, add appropriate filter capacitors near the input pins for impedance matching.
3) Prolonged soldering on the pins may cause internal connections to loosen. The soldering time should not exceed 5 seconds.
4) For more detailed information, please contact us.

Contact Information

Anhui Hesion Trading Co.,Ltd.
& Beijing Wienpower Technology Co., Ltd.

TEL:+86-551-65369069,65369067
Email: alecz@ahhesion.com
Backup:alecz@126.com

www.ahhesionpower.com